52-10 height adjustable rubber foot

product description

Designed for high accuracy weighing results when combined with the blind-hole load introduction available on Flintec load cells.

The 52-10 rubber foot is self-aligning and has the added feature of being height adjustable making ideal for industrial platform scales and a wide range of weighing tasks. The height is adjustable by rotating the foot. The 52-10 is especially designed for the SB4, SB5, SB6, SLB, SB9 and SB14 beam load cells.

applications

Industrial platform scales, low capacity vessel weighing systems.

accessories

Fixation plate

key features

Height adjustable design

Blind-hole load introduction

Low profile

Very easy to install

Capacity range: 20 kg to 2,500 kg

Zinc plated tool steel or stainless-steel construction options

Sizes available to suit a wide range of load cell capacities

W&M certified

CE RoHS compliant

flintec quality + precision

product dimensions (mm)

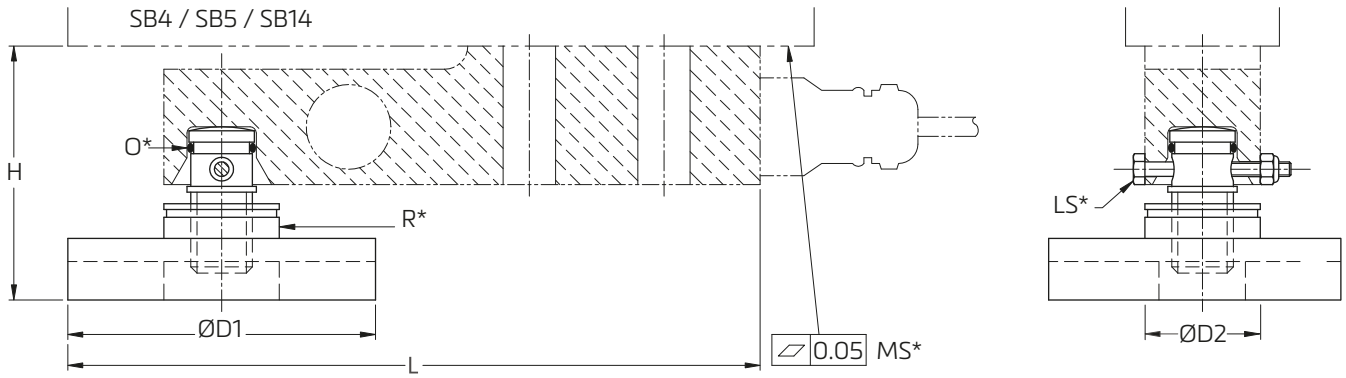

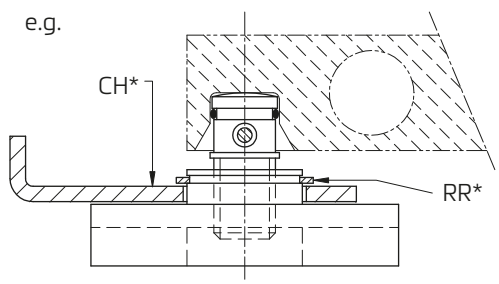

O* - O-ring
R* - Receptor for hook or other hardware
LS* - Locking screw

MS* - Load cell mounting surface
CH* - Connection hook for ramps
RR* - Retention ring
S* - Shim installed for height adjustment

Load Cell Type	Capacity	D1	D2	L	H
SB6	200...500 N (20,4...204 kg)	60	-	150	65...71*
SLB / SB9	200...500 lb (91...227 kg) / 250 kg			154	57...63*
	1...5 klb (454...2268 kg) / 500...2000 kg	80	30	164	59...67*
SB14	0,5...5 klb (227...2268 kg)				58...66 / 60...68*
SB4 / SB5	5...20 kN (510...2039 kg)			180	63...71

* Including spacer.
CAD files for customer's own application drawings are available for download from the Flintec homepage.

details of SLB load cell

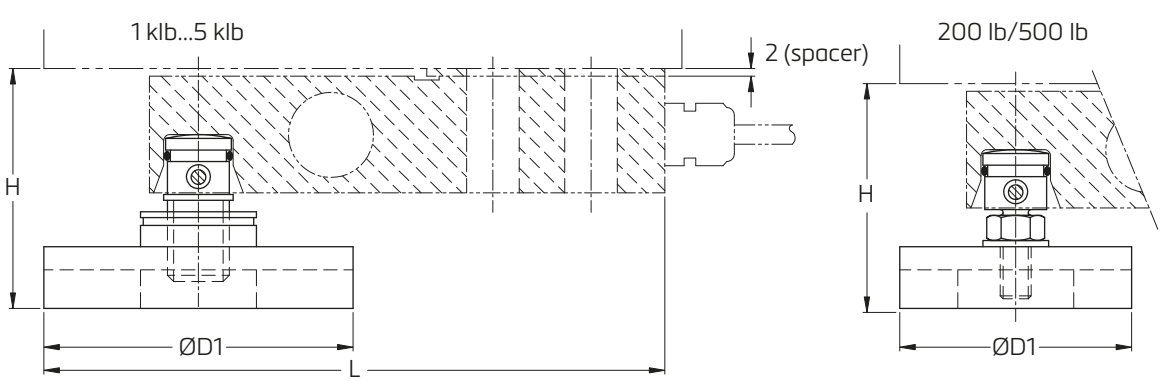

details of SB6 load cell

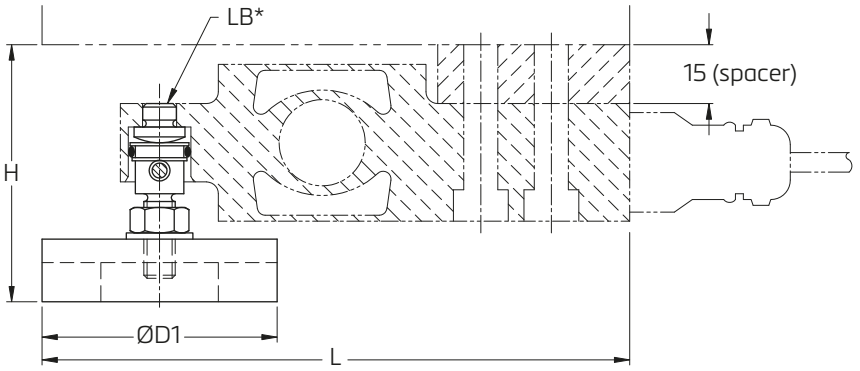

LB* - Load button

example setups

Tank weighing system with 3 load cells
(recommended base plate 52-00 included)

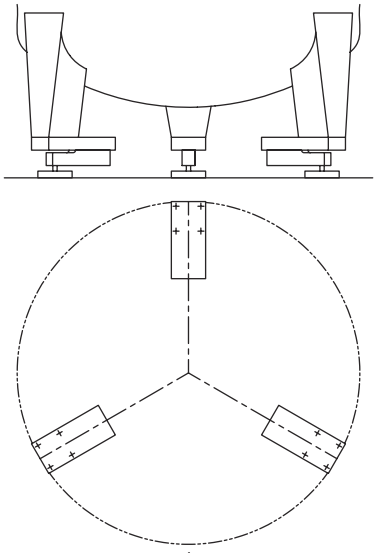

Platform scale with 4 load cells

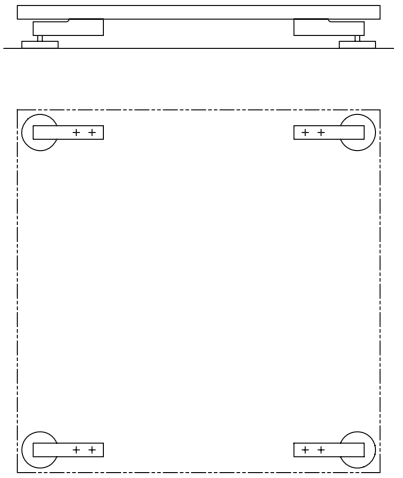

Specifications and dimensions are subject to change without notice.